Lighting Systems

16" Aluminum High Bay

Features

The JK Lighting16” aluminum high bay fixture is UL listed for damp locations. Adjustable bracket design (optional) allows for easy adjustment of reflector for different photometric patterns. The 16” heavy duty reflector is brightened and anodized for optimum reflectance.

Housing

The housing is manufactured of a heavy duty die cast aluminum with a white powder coat finish. Other colors available upon request. A junction box attaches to the top of the housing and includes a slide plate for weight distribution. The junction box allows for a 3/4” hook or pendant mount installation. Housing is easily accessible for future ballast replacement.

Applications

Warehouse facilities
Commercial buildings
Shipping and receiving areas
Cold storage facilities
Industrial plants

ISO9002 Compliant

UL

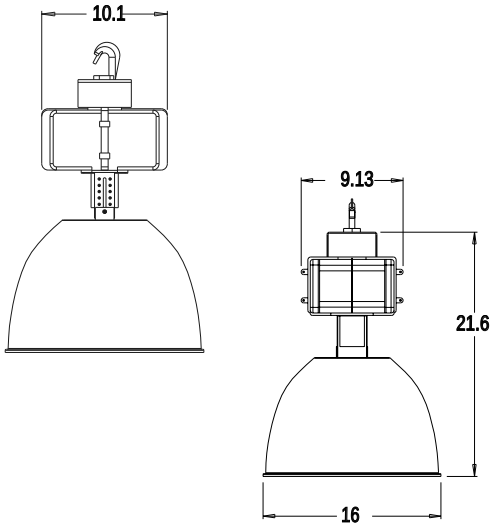

Accessories

Bi-level dimmer system

Wire Guard

Adjustable Bracket

Acrylic or Glass Flat Lens

Hook, Cord, Plug

Quartz Restrike

Swivel Pendant Mount

Select an appropriate choice from each column

Typical ordering number

JK-400-MH-ALHB16-MT-QRS

Prefix	Wattage	Lamp Type	Fixture Type	Voltage	Options
JK	150 175 200 250 320 350 400	HPS = High Pressure Sodium MH = Metal Halide PSMH = Pulse Start Metal Halide	ALHB16= Aluminum High Bay 16 inch	120v MT 480v	QRS = Quartz Restrike MP = MH Protected Lamp HCP = Hook, Cord, Plug GL = 16” Glass AFL = 16’ Acrylic Flat Lens BL = Bi-Level F = In-Line Fuse AB = Adjustable Bracket WG = Wire Guard SPM = Swivel Pendant Mount SC = Safety Chain

Lamp Included

JK Lighting Systems • P.O. Box 8867 • Stockton, CA 95208 • Ph: (209) 464-7539 • Fx: (209) 464-8656

www.jk-lighting.com email: jklight@sbcglobal.net